# Standard circulation pumps

## PC3F1558IUF00

Honeywell

**Optional Check Valve Kit:** PVC100

### Technical data

| | |
|---|---|
| Rate of flow: | up to 17,0 gpm |
| Pressure head: | up to 19,4 ft |
| Media temperature: | 14 °F to 203 °F |
| Installation lenght: | 6 ½ inch |
| Connection standard: | USA oval |
| Type of connection: | Crossflange |
| Protection class: | IP 44 |
| Insulation class: | F |
| Pressure max: | 145 psi |
| Control: | 3-step switch with manual speed selection |
| Rated voltage: | 1 x 115 V |
| Main frquency: | 60 Hz |
| Voltage tolerance: | +/- 10% |
| Shipping weight: | 7,8 lbs |

### Use

The PC3F 3-speed in-line wet rotor circulator with universal 4-bolt flange is designed for applications in closed-loop hydronic heating and cooling systems. The pump is non-submersible and for use in dry, frost-free, well-ventilated installations.

### Main areas of use

Heating, air-conditioning, and industry systems as

- dual pipe system
- underfloor heating
- boiler / primary circuit
- storage charging circuit

### Flow media

- heating water
- pure, thin, non-aggressive and non-explosive, mineral oil-free media without solid particles or fibres
- media with a max. viscosity of $1{,}08 \times 10^{-4}$ ft²/s
- operating data must be checked above 20 % glycol

### Materials

| Component | Material |
|---|---|
| Pump body | Grey-cast iron |
| Impeller | Polyamide (PA - GF 35) |
| Shaft | Ceramic |
| Bearing | Ceramic |
| Bearing plate | Stainless steel |
| Can | Stainless steel |

### Temperature range

| | |
|---|---|
| Ambient temperature: | 32°F to 104°F |
| Temperature class: | TF 95 |
| Media temperature: | 14°F to 203°F |

### Motor protection

The motor includes an internal thermal overload protection. External motor protection is not required.

### Speed switching

Three speed, with manual selector. The respective speed is set via rotary switch integrated in the terminal board

| Speed | Volts | Amps | Watts | Hp | Capacitor (µF) |
|---|---|---|---|---|---|
| 1 | 115 | 0,3 | 32 | 0,04288 | 8 |
| 2 | | 0,5 | 55 | 0,07370 | 8 |
| 3 | | 0,75 | 85 | 0,11390 | 8 |

### Dimensions

| L1 | L2 | L3 | L4 |
|---|---|---|---|
| 6.5 | 5.5 | 4.7 | 6.5 |

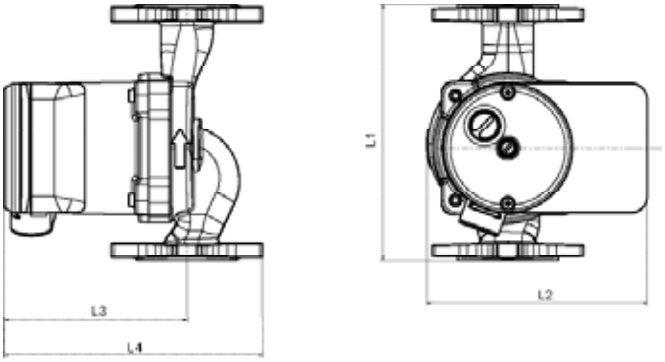


### Characteristics

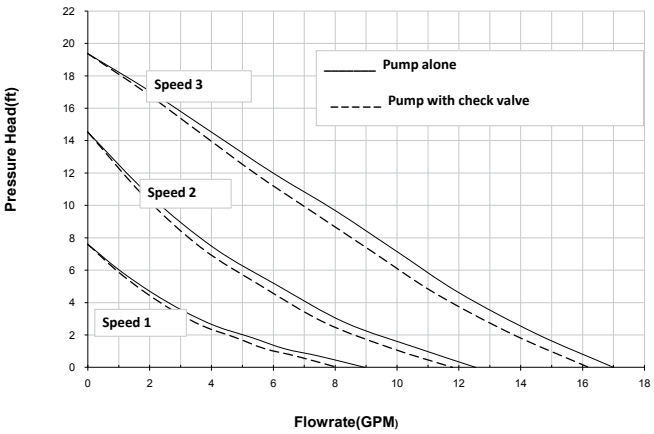


Per industry standards data has ± 10% tolerance


© 2011 Honeywell International Inc.